metabo®

SE 4000

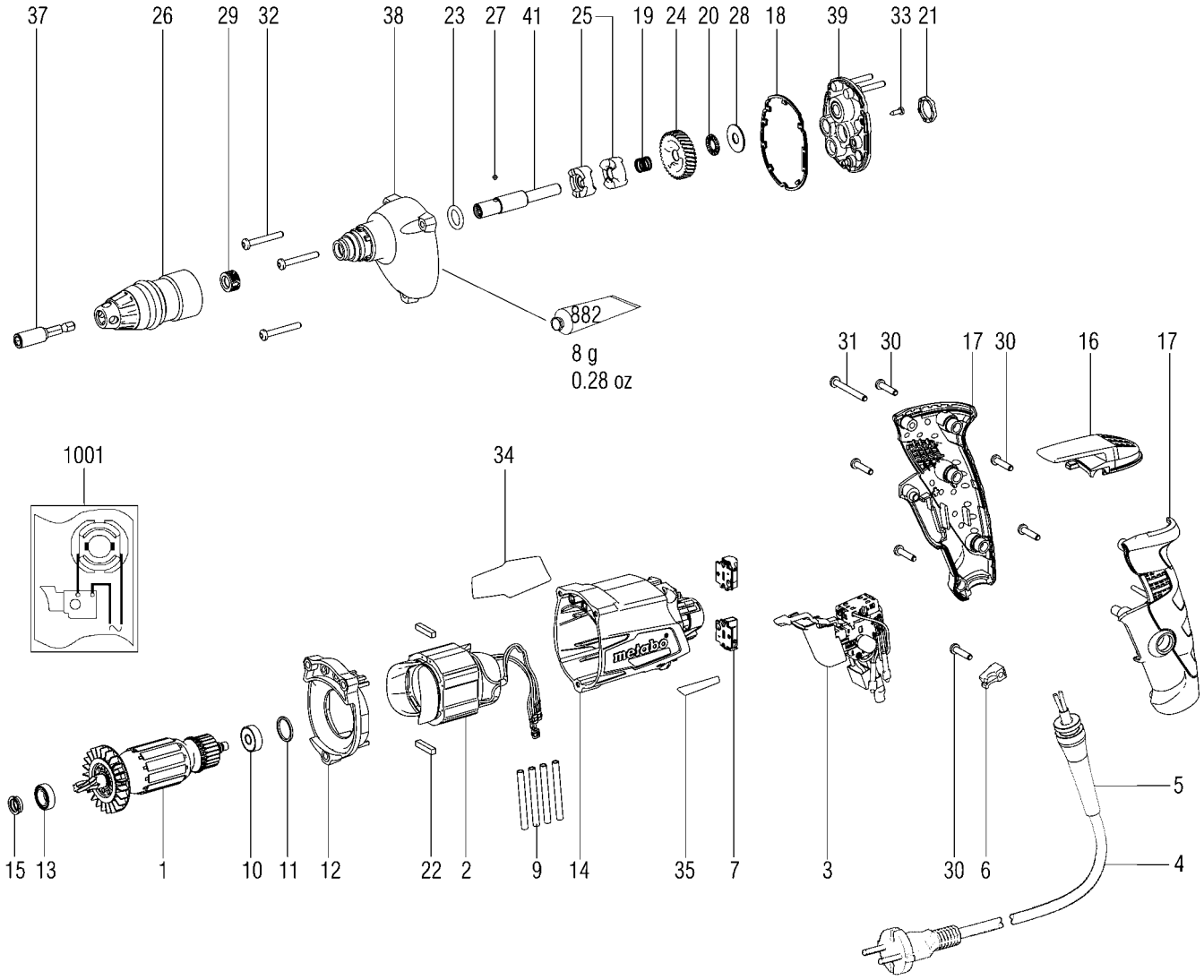

metabo®

SE 4000

Позиция	Количество	Номер для заказа	Описание	PG
1	1	310011100	Armature compl., 230V	37
2	1	311012120	Feldpaket vollst, 230V	33
3	1	343410360	Electronic switch without dial,230V	29
4	1	344499520	Cable w.CEE plug	25
5	1	344101140	Cable sleeve	13
6	1	343362490	Cable clip	12
7	2	316054740	Brush holder compl.,230 V	19
9	4	339040970	insulating hose	11
10	1	143114900	Ball bearing, 6X 19X 6	18
11	1	143192430	O-ring	12
12	1	343434360	Intermediate flange	14
13	1	143115570	Ball bearing,10x19x5	18
14	1	315013610	Motor housing	25
15	1	343434430	Sealing ring	11
16	1	343434590	Hook	14
17	1	343434340	Housing w.cover	24
18	1	344099610	Seal	11
19	1	342003960	Pressure spring	11
20	1	143113820	Axial needle bearing	19
21	1	344099600	Rubber buffer	11
22	2	344093350	Rubber plug	11
23	1	143193920	O-ring	18
24	1	340013030	Claw wheel	24
25	2	341161570	Claw disc	22
26	1	316054470	Tiefenanschlag vollst.	26
27	1	143120020	Ball	12
28	1	143114760	Thrust washer	11
29	1	343434410	Sleeve	11
30	6	141116020	Self-tap fill h screw	12
31	1	141116990	Self-tap. fill. h. screw	12
32	3	141124570	Self-tap. fill. h. screw	11
33	1	141119900	Self-tapp. fill. h. screw	11
34	1	338063160	Rating plate	11
35	1	338125830	Type label,SE 4000, 20045XXX	14
37	1	316055470	Bit holding sleeves	18
38	1	316057010	Gear housing compl.	28
39	1	316057030	Gear flange compl.	30
41	1	341604640	Shaft	21
882	1	344130800	Grease FG 126	26
1001	1	338505900	Wiring diagram,230V	

metabo®
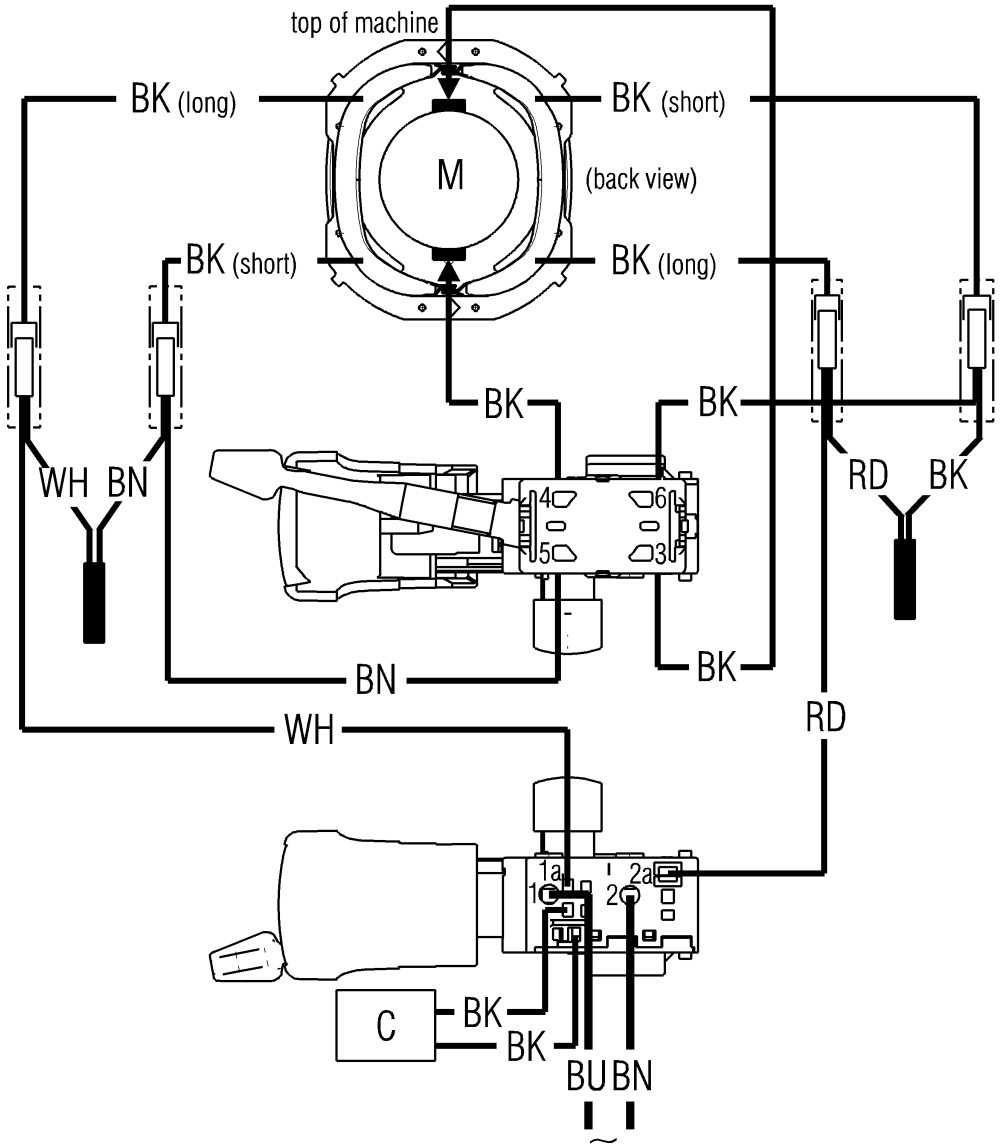
SE 4000