metabo®

HWW 6000/25 Inox

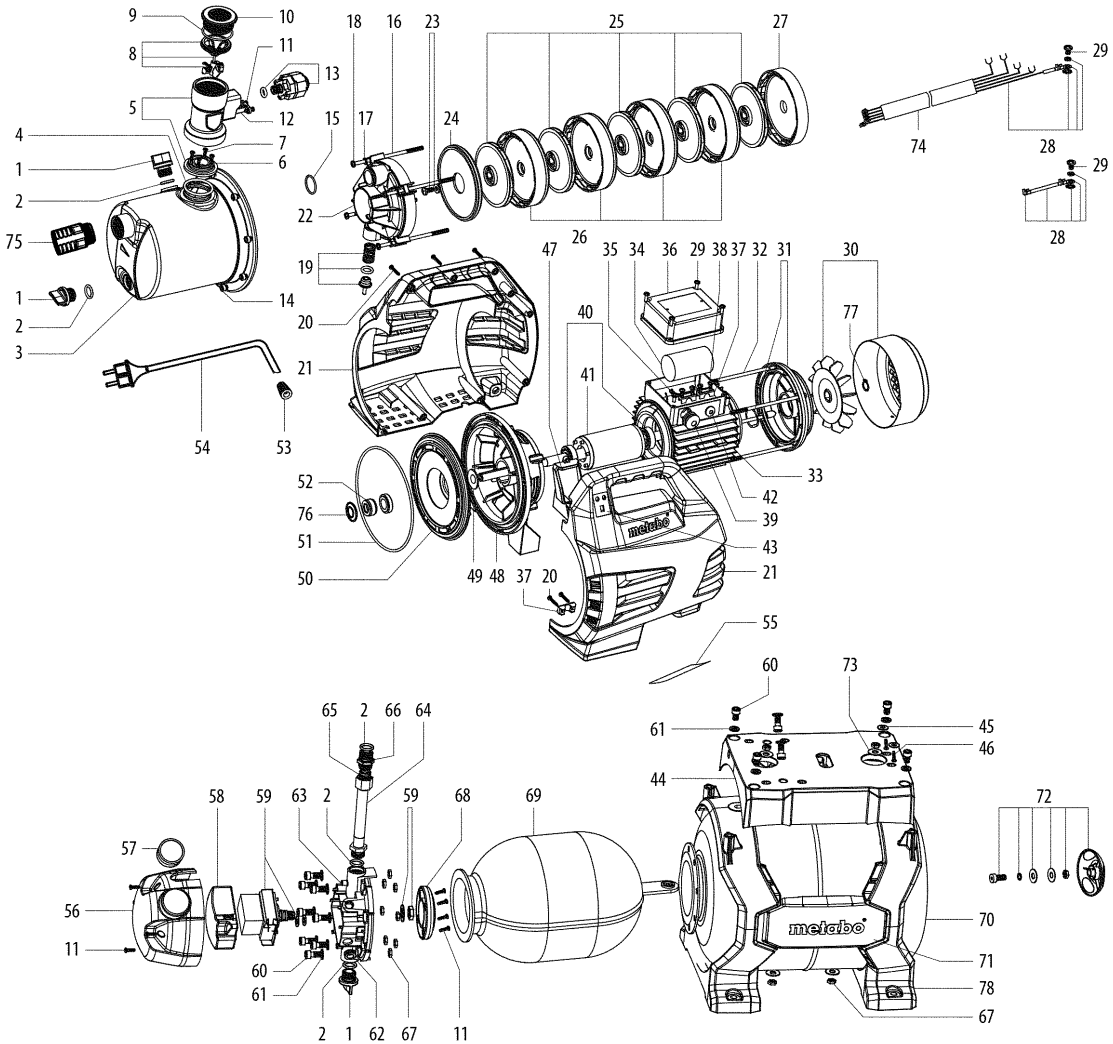

metabo®

HWW 6000/25 Inox

Позиция	Количество	Номер для заказа	Описание	PG
1	3	341722140	THREADED PLUG	11
2	4	143195620	O-ring	11
3	1	341165210	Pump housing	41
4	1	143195650	O-ring	11
5	1	316060180	Clamping piece cpl.	20
6	4	341722100	Screw	11
7	4	339009240	Washer	11
8	1	316060190	FLOW PROTECTION cpl.	14
9	1	143195660	O-ring	11
10	1	339147570	Connector	20
11	15	341722090	Screw	11
12	1	343084630	sensor	19
13	1	316060200	pressure sensor cpl.	20
14	8	341722060	Screw	11
15	1	143195540	O-ring	11
16	4	341570910	Bolt	14
17	4	339009250	Washer	11
18	4	339009220	Washer	11
19	1	316060450	FLOW PROTECTION cpl.	12
20	11	341722120	Screw	11
21	1	316060220	Housing compl.	30
22	1	343440730	Flange (impeller)	18
23	1	316060310	clamp kit cpl. (impeller)	11
24	1	343440700	Cover	14
25	5	343440690	Wheel	19
26	4	343440710	Cover	20
27	1	343440770	Wheel	15
28	1	316060250	Cable compl.	13
29	6	341722130	Screw	11
30	1	316060320	Fan with fan cover	18
31	1	316060240	Motor flange compl.	25
32	4	341722050	Screw	11
33	1	316060330	Stator compl.	50
34	1	343254880	Condenser	22
35	5	341165220	Cable binder	11
36	1	341165260	LID, TERMINAL BOX	13
37	3	343436720	Cable clip	11
38	4	341705150	Screw self-tapping	11
39	1	344112890	Cable sleeve	11
40	2	320050840	Ball bearing	15
41	1	310011400	ARMATURE	39

metabo®

HWW 6000/25 Inox

Позиция	Количество	Номер для заказа	Описание	PG
42	1	344112880	Cable sleeve	11
43	1	343410760	Switch	18
44	1	344112950	PUMP BASE	26
45	2	339009290	Washer	11
46	2	341722080	Screw	11
47	1	343085920	Printed circuit	37
48	1	315419060	Motor flange	29
49	1	343435670	Sealing washer	11
50	1	343440640	Cover	29
51	1	143195550	O-ring	12
52	1	339012930	Gasket	25
53	1	344112900	Cable sleeve	11
54	1	344112910	Cable	24
55	1	338061230	Rating plate	11
56	1	344099940	Cover, outer	14
57	1	341165250	pressure indicator	24
58	1	344099930	Switch guard	11
59	1	316060440	Pressure switch compl.	29
60	14	141110320	Hexagon head screw	12
61	14	339009310	Washer	16
62	1	343440650	CABLE CLAMP	11
63	1	343440760	Cover (tank)	22
64	1	344112930	PRESSURE HOSE	25
65	1	339012940	Gasket	11
66	1	343440680	Adapter	11
67	12	341109010	Nut	11
68	1	344112970	Filter (flange)	11
69	1	344099910	RUBBER BAG	24
70	1	341165370	Tank	44
71	2	343440810	Connector (f. frame)	21
72	1	316060430	VALVE SET compl.	19
73	4	339012070	Washer	11
74	1	344112920	Cable compl.	21
75	1	628803000	"Обратный клапан, 1"" папа x 1"" fem"	
76	1	339009280	Washer	11
77	1	342024010	Circlip	11
78	2	343436980	Cover f. flange	20