metabo®

W 26-230 MVT

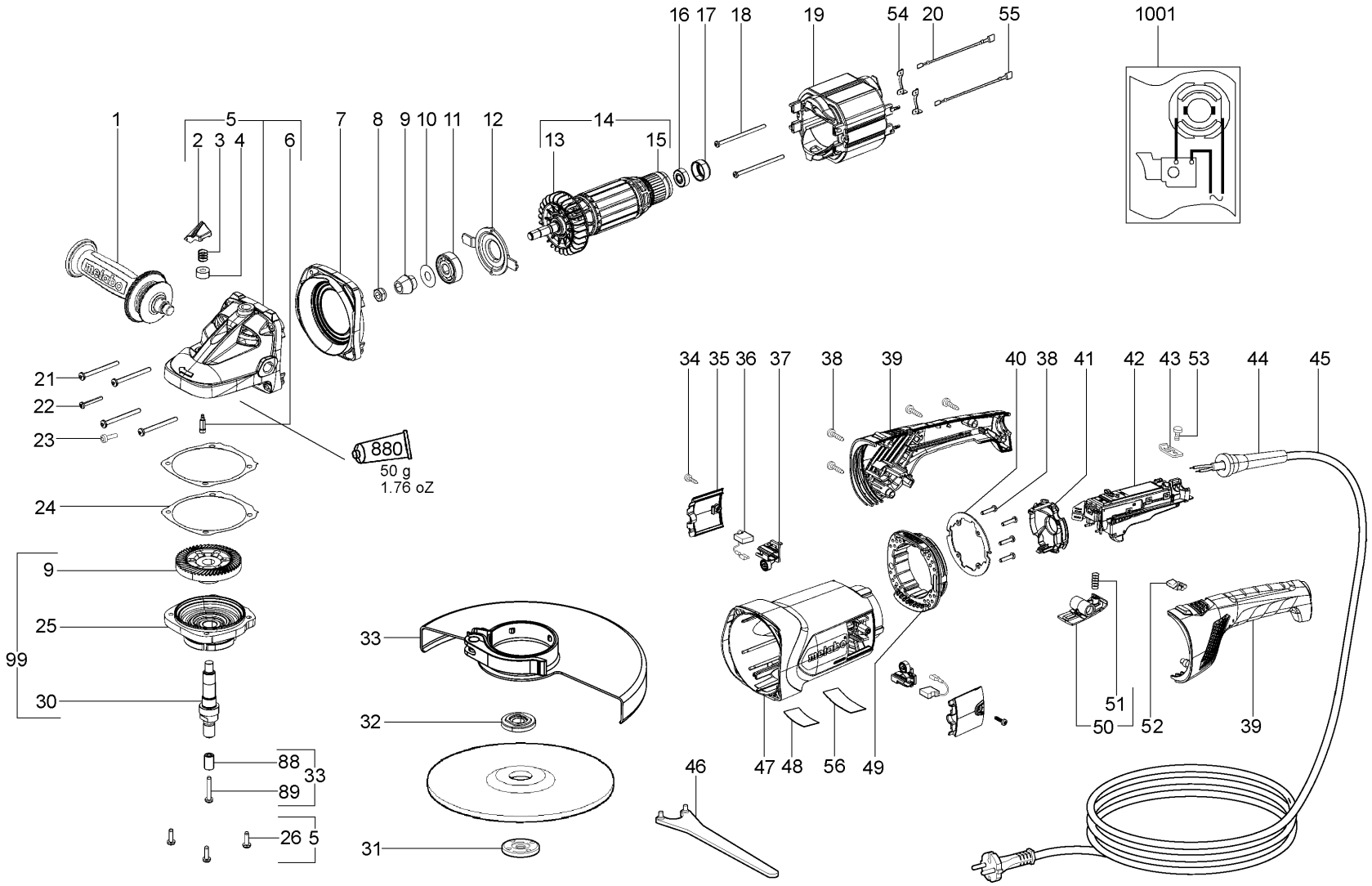

metabo®

W 26-230 MVT

Позиция	Количество	Номер для заказа	Описание	PG
1	1	314000960	Anti-vibration handle,M 14	28
2	1	343399790	Push button black	11
3	1	342003390	Pressure spring	11
4	1	341005830	Guide bush	15
5	1	316045500	Gear housing cpl.	36
6	1	341515430	Bolt	11
7	1	343395540	Intermediate flange	15
8	1	341100660	Self locking nut	14
9	1	316045530	Bevel gear	34
10	1	141123870	Washer	11
11	1	143115510	Ball bearing, 12x37x12	16
12	1	339007280	Fixed bearing cover	14
13	1	316045560	Fan w. dust guard	21
14	1	310011350	Armature compl.,230 V	46
15	1	343390630	Sealing washer	11
16	1	143113400	Ball bearing, 8x22x7	22
17	1	344094080	Rubber bearing	12
18	2	141118970	Self-tap. fill. h. screw	11
19	1	311009580	Field coil	35
20	2	344498050	Strand compl.,230V	11
21	4	141118810	Self-tap. fill. h. screw	11
22	1	141122020	Fillister head screw	11
23	1	141119850	Fillister head screw	11
24	2	339011810	Gasket	11
25	1	316045550	Gear flange cpl.	33
29	1	141181500	Circlip	11
30	1	341602980	Spindle shaft	29
31	1	341106900	Flange nut	20
32	1	341031160	Clamping flange	22
33	1	316053510	Wheel guard compl.	35
34	2	341702050	Screw	11
35	2	343395530	Brush holder cover	11
36	1	316045570	Carbon brush set,230 V	24
37	2	343000950	Brush guide	19
38	8	141116020	Self-tap fill h screw	12
39	1	343399760	Handle upper+lower part	20
40	1	339007320	Retaining sheet	12
41	1	343398250	Edge protection	11
42	1	343409150	Switch,230V/120V	26
43	1	339127730	Cable clip	11
44	1	344094550	Cable sleeve	13

Позиция	Количество	Номер для заказа	Описание	PG
45	1	344487800	Cable with plug	30
46	1	344160840	Pin spanner	17
47	1	315013300	Motor housing	25
48	1	338063440	Rating plate	11
49	1	343397490	Damper	20
50	1	343395520	Locking lever	12
51	1	342002170	Pressure spring	11
52	1	343398410	Dummy plug	11
53	1	141116800	Self-tap. fill. h. screw	11
54	1	399999990	Part not needed	
55	1	399999990	Part not needed	
56	1	399999990	Part not needed	
88	1	341006090	Spacer bush	11
89	1	141111340	Cap screw	11
99	1	316064090	Gear flange cpl.	42
880	1	344130910	Grease 100G	24
1001	1	338502110	Diagram	

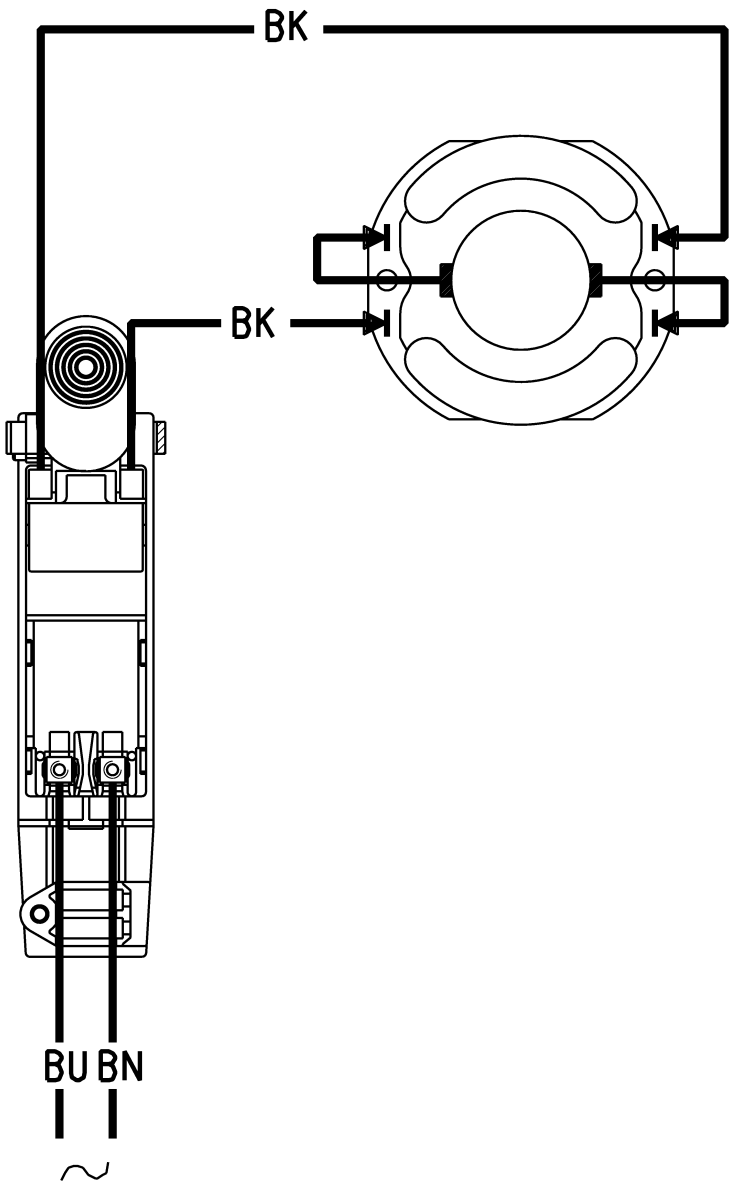
BK
BK
BU BN
~